Important notice

Dear Customer,

On 7 February 2017 the former NXP Standard Product business became a new company with the tradename **Nexperia**. Nexperia is an industry leading supplier of Discrete, Logic and PowerMOS semiconductors with its focus on the automotive, industrial, computing, consumer and wearable application markets

In data sheets and application notes which still contain NXP or Philips Semiconductors references, use the references to Nexperia, as shown below.

Instead of http://www.nxp.com, http://www.philips.com/ or http://www.semiconductors.philips.com/, use **http://www.nexperia.com**

Instead of sales.addresses@www.nxp.com or sales.addresses@www.semiconductors.philips.com, use **salesaddresses@nexperia.com** (email)

Replace the copyright notice at the bottom of each page or elsewhere in the document, depending on the version, as shown below:
- © NXP N.V. (year). All rights reserved or © Koninklijke Philips Electronics N.V. (year). All rights reserved
Should be replaced with:
- **© Nexperia B.V. (year). All rights reserved**.

If you have any questions related to the data sheet, please contact our nearest sales office via e-mail or telephone (details via **salesaddresses@nexperia.com**). Thank you for your cooperation and understanding,

Kind regards,

Team Nexperia

DATA SHEET

74ALVCH16646
16-bit bus transceiver/register (3-State)

Product specification

IC24 Data Handbook

1998 Sep 03

Philips
Semiconductors

PHILIPS

16-bit bus transceiver/register (3-State) 74ALVCH16646

FEATURES

- Complies with JEDEC standard no. 8-1A
- CMOS low power consumption
- MULTIBYTE™ flow-through pin-out architecture
- Low inductance, multiple V_{CC} and ground pins for minimum noise and ground bounce
- Direct interface with TTL levels
- Current drive ± 24 mA at 3.0 V
- Output drive capability 50Ω transmission lines @ 85°C
- All inputs have bushold circuitry

DESCRIPTION

The 74ALVCH16646 consists of 16 non-inverting bus transceiver circuits with 3-State outputs, D-type flip-flops and control circuitry arranged for multiplexed transmission of data directly from the internal registers. Data on the 'A' or 'B' bus will be clocked in the internal registers, as the appropriate clock (CP_{AB} or CP_{BA}) goes to a HIGH logic level. Output enable ($\overline{OE}$) and direction (DIR) inputs are provided to control the transceiver function. In the transceiver mode, data present at the high-impedance port may be stored in either the 'A' or 'B' register, or in both. The select source inputs (S_{AB} and S_{BA}) can multiplex stored and real-time (transparent mode) data. The direction (DIR) input determines which bus will receive data when $\overline{OE}$ is active (LOW). In the isolation mode ($\overline{OE}$ = HIGH), 'A' data may be stored in the 'B' register and/or 'B' data may be stored in the 'A' register.

When an output function is disabled, the input function is still enabled and may be used to store and transmit data. Only one of the two buses, 'A' or 'B' may be driven at a time.

To ensure the high impedance state during power up or power down, $\overline{OE}$ should be tied to V_{CC} through a pullup resistor; the minimum value of the resistor is determined by the current-sinking/current-sourcing capability of the driver.

Active bus-hold circuitry is provided to hold unused or floating data inputs at a valid logic level.

PIN CONFIGURATION

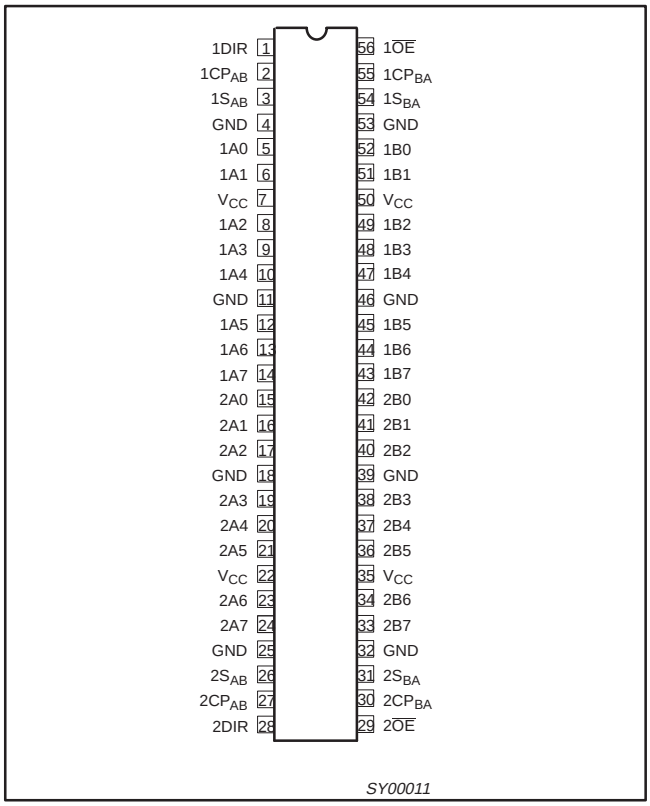

QUICK REFERENCE DATA

GND = 0V; T_{amb} = 25°C; $t_r = t_f \leq 2.5$ns

SYMBOL	PARAMETER	CONDITIONS		TYPICAL	UNIT
t_{PHL}/t_{PLH}	Propagation delay nAx to nBx	V_{CC} = 2.5V, C_L = 30pF V_{CC} = 3.3V, C_L = 50pF		2.6 2.7	ns
C_I	Input capacitance			3.0	pF
C_{PD}	Power dissipation capacitance per channel	V_I = GND to V_{CC}[1]	Outputs enabled	36	pF
			Outputs disabled	4	
F_{max}	Maximum clock frequency	V_{CC} = 2.5V, C_L = 30pF V_{CC} = 3.3V, C_L = 50pF		300 320	MHz

NOTES:

1. C_{PD} is used to determine the dynamic power dissipation (P_D in μW):
   $P_D = C_{PD} \times V_{CC}^2 \times f_i + \Sigma (C_L \times V_{CC}^2 \times f_o)$ where:
   f_i = input frequency in MHz; C_L = output load capacity in pF;
   f_o = output frequency in MHz; V_{CC} = supply voltage in V;
   $\Sigma (C_L \times V_{CC}^2 \times f_o)$ = sum of outputs.

ORDERING INFORMATION

PACKAGES	TEMPERATURE RANGE	OUTSIDE NORTH AMERICA	NORTH AMERICA	DWG NUMBER
56-Pin Plastic TSSOP Type II	–40°C to +85°C	74ALVCH16646 DGG	ACH16646 DGG	SOT364-1

PIN DESCRIPTION

PIN NUMBER	SYMBOL	NAME AND FUNCTION
1, 28	nDIR	Direction control input
2, 27	nCP_{AB}	Clock input A-to-B
3, 26	nS_{AB}	Select input A-to-B
5, 6, 8, 9, 10, 12, 13, 14	1A0 to 1A7	Data inputs/outputs
4, 11, 18, 25, 32, 39, 46, 53	GND	Ground (0V)
7, 22, 35, 50	V_{CC}	Positive supply voltage
15, 16, 17, 19, 20, 21, 23, 24	2A0 to 2A7	Data inputs/outputs
29, 56	$n\overline{OE}$	Output enable
30, 55	nCP_{BA}	Clock input B-to-A
31, 54	nS_{BA}	Select input B-to-A
42, 41, 40, 38, 37, 36, 34, 33	2B0 to 2B7	Data inputs/outputs
52, 51, 49, 48, 47, 45, 44, 43	1B0 to 1B7	Data inputs/outputs

LOGIC SYMBOL

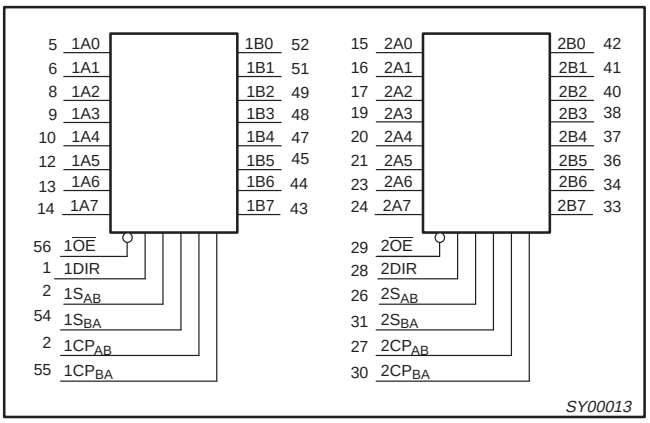

BUSHOLD CIRCUIT

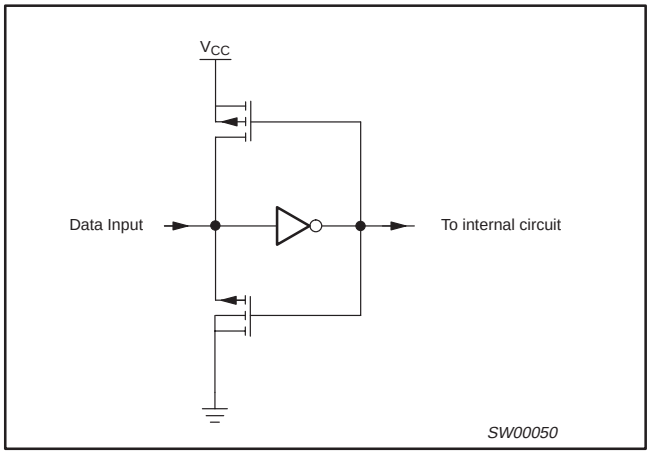

LOGIC SYMBOL (IEEE/IEC)

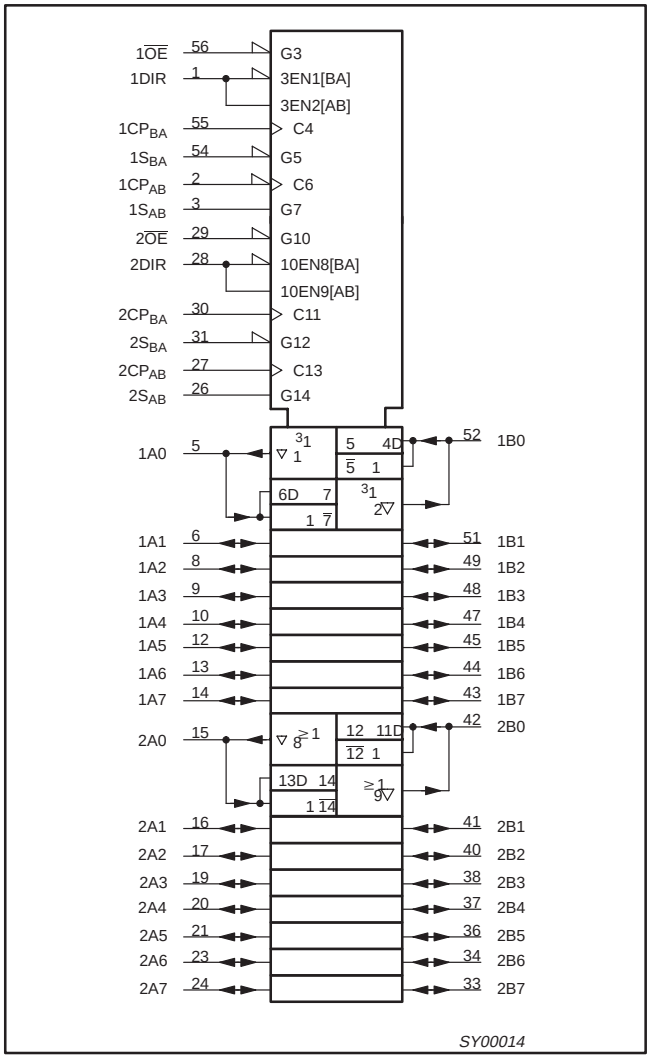

LOGIC DIAGRAM (one section)

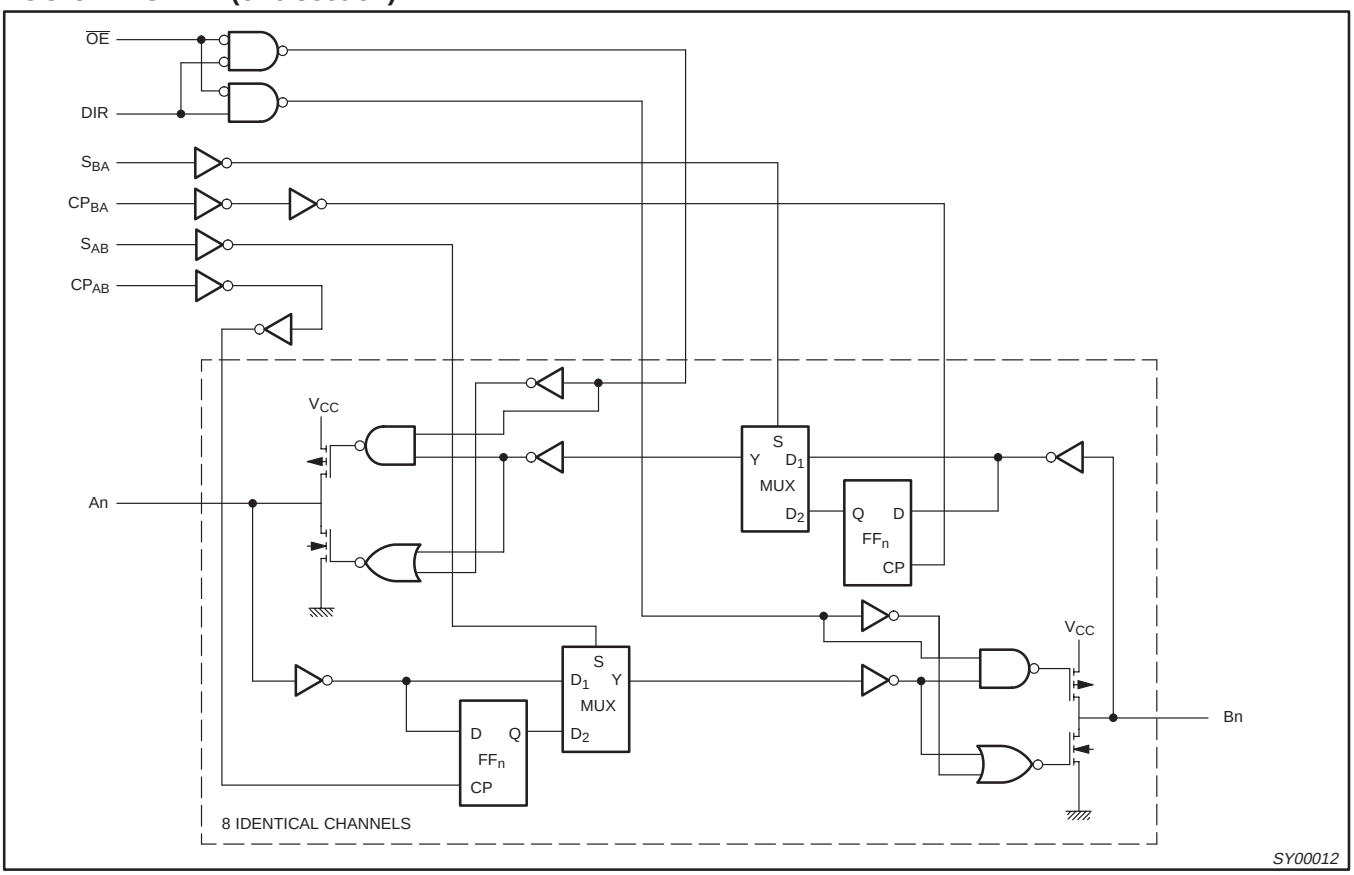

FUNCTION TABLE

INPUTS						DATA I/O *		FUNCTION
$n\overline{OE}$	nDIR	nCP_{AB}	nCP_{BA}	nS_{AB}	nS_{BA}	nAx	nBx	
X X	X X	↑ X	X ↑	X X	X X	input un*	un* input	store A, B unspecified* store B, A unspecified*
H H	X X	↑ H or L	↑ H or L	X X	X X	input	input	store A and B data, isolation hold storage
L L	L L	X X	X H or L	X X	L H	output	input	real-time B data to A bus stored B data to A bus
L L	H H	X H or L	X X	L H	X X	input	output	real-time A data to B bus stored A data to B bus

* The data output functions may be enabled or disabled by various signals at the $\overline{OE}$ and DIR inputs. Data input functions are always enabled, i.e., data at the bus inputs will be stored on every LOW-to-HIGH transition on the clock inputs.

un = unspecified
H = HIGH voltage level
L = LOW voltage level
X = don't care
↑ = LOW-to-HIGH level transition

RECOMMENDED OPERATING CONDITIONS

SYMBOL	PARAMETER	CONDITIONS	LIMITS		UNIT
			MIN	MAX	
V_{CC}	DC supply voltage 2.5V range (for max. speed performance @ 30 pF output load)		2.3	2.7	V
	DC supply voltage 3.3V range (for max. speed performance @ 50 pF output load)		3.0	3.6	
V_I	DC Input voltage range		0	V_{CC}	V
V_O	DC output voltage range		0	V_{CC}	V
T_{amb}	Operating free-air temperature range		–40	+85	°C
t_r, t_f	Input rise and fall times	V_{CC} = 2.3 to 3.0V V_{CC} = 3.0 to 3.6V	0 0	20 10	ns/V

ABSOLUTE MAXIMUM RATINGS

In accordance with the Absolute Maximum Rating System (IEC 134)
Voltages are referenced to GND (ground = 0V)

SYMBOL	PARAMETER	CONDITIONS	RATING	UNIT
V_{CC}	DC supply voltage		–0.5 to +4.6	V
I_{IK}	DC input diode current	$V_I < 0$	–50	mA
V_I	DC input voltage	For control pins[1]	–0.5 to +4.6	V
		For data inputs[1]	–0.5 to V_{CC} +0.5	
I_{OK}	DC output diode current	$V_O > V_{CC}$ or $V_O < 0$	±50	mA
V_O	DC output voltage	Note 1	–0.5 to V_{CC} +0.5	V
I_O	DC output source or sink current	V_O = 0 to V_{CC}	±50	mA
I_{GND}, I_{CC}	DC V_{CC} or GND current		±100	mA
T_{stg}	Storage temperature range		–65 to +150	°C
P_{TOT}	Power dissipation per package –plastic thin-medium-shrink (TSSOP)	For temperature range: –40 to +125 °C above +55°C derate linearly with 11.3 mW/K above +55°C derate linearly with 8 mW/K	 850 600	mW

NOTE:
1. The input and output voltage ratings may be exceeded if the input and output current ratings are observed.

DC ELECTRICAL CHARACTERISTICS

Over recommended operating conditions. Voltage are referenced to GND (ground = 0 V).

SYMBOL	PARAMETER	TEST CONDITIONS	LIMITS			UNIT
			Temp = -40°C to +85°C			
			MIN	TYP[1]	MAX	
V_{IH}	HIGH level Input voltage	V_{CC} = 2.3 to 2.7V	1.7	1.2		V
		V_{CC} = 2.7 to 3.6V	2.0	1.5		
V_{IL}	LOW level Input voltage	V_{CC} = 2.3 to 2.7V		1.2	0.7	V
		V_{CC} = 2.7 to 3.6V		1.5	0.8	
V_{OH}	HIGH level output voltage	V_{CC} = 2.3 to 3.6V; V_I = V_{IH} or V_{IL}; I_O = –100µA	V_{CC} – 0.2	V_{CC}		V
		V_{CC} = 2.3V; V_I = V_{IH} or V_{IL}; I_O = –6mA	V_{CC} – 0.3	V_{CC} – 0.08		
		V_{CC} = 2.3V; V_I = V_{IH} or V_{IL}; I_O = –12mA	V_{CC} – 0.6	V_{CC} – 0.26		
		V_{CC} = 2.7V; V_I = V_{IH} or V_{IL}; I_O = –12mA	V_{CC} – 0.5	V_{CC} – 0.14		
		V_{CC} = 3.0V; V_I = V_{IH} or V_{IL}; I_O = –12mA	V_{CC} – 0.6	V_{CC} – 0.09		
		V_{CC} = 3.0V; V_I = V_{IH} or V_{IL}; I_O = –24mA	V_{CC} – 1.0	V_{CC} – 0.28		
V_{OL}	LOW level output voltage	V_{CC} = 2.3 to 3.6V; V_I = V_{IH} or V_{IL}; I_O = 100µA		GND	0.20	V
		V_{CC} = 2.3V; V_I = V_{IH} or V_{IL}; I_O = 6mA		0.07	0.40	V
		V_{CC} = 2.3V; V_I = V_{IH} or V_{IL}; I_O = 12mA		0.15	0.70	V
		V_{CC} = 2.7V; V_I = V_{IH} or V_{IL}; I_O = 12mA		0.14	0.40	
		V_{CC} = 3.0V; V_I = V_{IH} or V_{IL}; I_O = 24mA		0.27	0.55	
I_I	Input leakage current	V_{CC} = 2.3 to 3.6V; V_I = V_{CC} or GND		0.1	5	µA
I_{OZ}	3-State output OFF-state current	V_{CC} = 2.7 to 3.6V; V_I = V_{IH} or V_{IL}; V_O = V_{CC} or GND		0.1	10	µA
I_{CC}	Quiescent supply current	V_{CC} = 2.3 to 3.6V; V_I = V_{CC} or GND; I_O = 0		0.2	40	µA
ΔI_{CC}	Additional quiescent supply current	V_{CC} = 2.3V to 3.6V; V_I = V_{CC} – 0.6V; I_O = 0		150	750	µA
I_{BHL}	Bus hold LOW sustaining current	V_{CC} = 2.3V; V_I = 0.7V[2]	45	–		µA
		V_{CC} = 3.0V; V_I = 0.8V[2]	75	150		
I_{BHH}	Bus hold HIGH sustaining current	V_{CC} = 2.3V; V_I = 1.7V[2]	–45			µA
		V_{CC} = 3.0V; V_I = 2.0V[2]	–75	–175		
I_{BHLO}	Bus hold LOW overdrive current	V_{CC} = 3.6V[2]	500			µA
I_{BHHO}	Bus hold HIGH overdrive current	V_{CC} = 3.6V[2]	–500			µA

NOTES:
1. All typical values are at T_{amb} = 25°C.
2. Valid for data inputs of bus hold parts.

AC CHARACTERISTICS FOR V_{CC} = 2.3V TO 2.7V RANGE

GND = 0V; $t_r = t_f \leq 2.0$ns; C_L = 30pF

SYMBOL	PARAMETER	WAVEFORM	LIMITS			UNIT
			V_{CC} = 2.5V ± 0.2V			
			MIN	TYP	MAX	
t_{PLH}/t_{PHL}	Propagation delay nAx to nBx, nBx to nAx	1	1.0	2.7	4.8	ns
	Propagation delay nCP_{AB} to nBx, nCP_{BA} to nAx	3	1.0	3.4	5.6	
	Propagation delay nS_{AB} to nBx, nS_{BA} to nAx	2	1.0	3.4	6.8	
t_{PZH}/t_{PZL}	3-State output enable time $n\overline{OE}$ to nAx, nBx	4	1.0	3.3	6.5	ns
t_{PHZ}/t_{PLZ}	3-State output disable time $n\overline{OE}$ to nAx, nBx	4	1.6	2.8	5.7	ns
t_{PZH}/t_{PZL}	3-State output enable time nDIR to nAx, nBx	5	1.0	3.4	7.8	ns
t_{PHZ}/t_{PLZ}	3-State output disable time nDIR to nAx, nBx	5	1.5	3.0	6.5	ns
t_W	Pulse width HIGH or LOW nCP_{AB}, nCP_{BA}	3	3.3	1.2		ns
t_{SU}	Set up time nAx to nCP_{AB}, nBx to nCP_{BA}	3	1.6	0.2		ns
t_h	Hold time nAx to nCP_{AB}, nBx to nCP_{BA}	3	0.6	0.1		ns
F_{max}	Maximum clock pulse frequency	3	150	300		MHz

NOTE:

1. All typical values are at V_{CC} = 2.5V and T_{amb} = 25°C.

AC CHARACTERISTICS FOR V_{CC} = 3.0V TO 3.6V RANGE AND V_{CC} = 2.7V

GND = 0V; $t_r = t_f$ = 2.5ns; C_L = 50pF

SYMBOL	PARAMETER	WAVEFORM	LIMITS						UNIT
			V_{CC} = 3.3V ± 0.3V			V_{CC} = 2.7V			
			MIN	TYP[1, 2]	MAX	MIN	TYP[1]	MAX	
t_{PHL}/t_{PLH}	Propagation delay nAx to nBx, nBx to nAx	1	1.0	2.6	3.9	1.0	2.8	4.5	ns
t_{PHL}/t_{PLH}	Propagation delay nCP_{AB} to nBx, nCP_{BA} to nAx	3	1.4	2.9	4.5	1.4	3.1	5.2	ns
t_{PHL}/t_{PLH}	Propagation delay nSAB to nBx, nSBA to nAx	2	1.3	3.1	5.3	1.3	3.5	6.4	ns
t_{PZH}/t_{PZL}	3-State output enable time $n\overline{OE}$ to nAx, nBx	4	1.0	2.3	5.1	1.0	3.2	6.2	ns
t_{PHZ}/t_{PLZ}	3-State output disable time $n\overline{OE}$ to nAx, nBx	4	1.0	2.9	4.7	1.0	3.1	5.0	ns
t_{PZH}/t_{PZL}	3-State output enable time nDIR to nAx, nBx	5	1.4	3.0	5.1	1.4	3.4	6.2	ns
t_{PHZ}/t_{PLZ}	3-State output disable time nDIR to nAx, nBx	5	1.4	2.5	5.3	1.4	3.3	6.0	ns
t_W	Pulse width HIGH or LOW nCP_{AB}, nCP_{BA}	3	3.3	0.7		3.3	1.0		ns
t_{SU}	Set up time nAx to nCP_{AB}, nBx to nCP_{BA}	3	1.4	0.3		1.7	0.2		ns
t_h	Hold time nAx to nCP_{AB}, nBx to nCP_{BA}	3	0.7	0.2		0.4	0.1		ns
F_{max}	Maximum clock pulse frequency	3	150	320		150	320		MHz

NOTES:

1. All typical values are at T_{amb} = 25°C.
2. V_{CC} = 3.3V

AC WAVEFORMS

V_{CC} = 2.3 TO 2.7 V RANGE

1. V_M = 0.5 V
2. $V_X = V_{OL}$ + 0.15V
3. $V_Y = V_{OH}$ – 0.15V
4. $V_I = V_{CC}$
5. V_{OL} and V_{OH} are the typical output voltage drop that occur with the output load.

V_{CC} = 3.0 TO 3.6 V RANGE AND V_{CC} = 2.7 V

1. V_M = 1.5 V
2. $V_X = V_{OL}$ + 0.3V
3. $V_Y = V_{OH}$ – 0.3V
4. V_I = 2.7 V
5. V_{OL} and V_{OH} are the typical output voltage drop that occur with the output load.

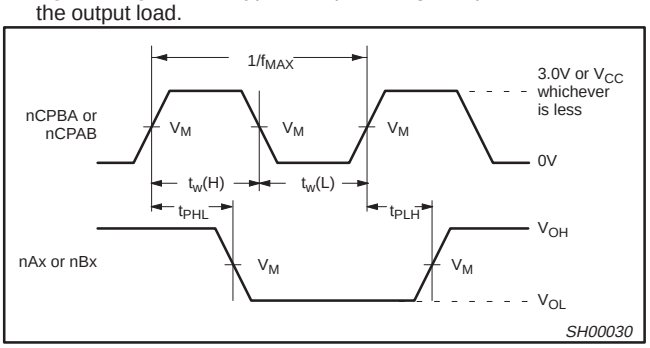

Waveform 1. Propagation Delay, Clock Input to Output, Clock Pulse Width, and Maximum Clock Frequency

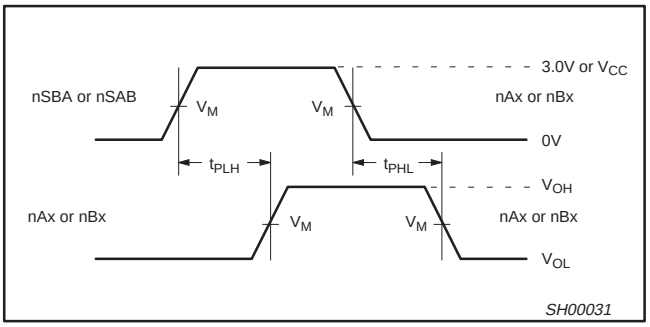

Waveform 2. Propagation Delay, nSAB to nBx or nSBA to nAx, nAx to nBx or nBx to nAx

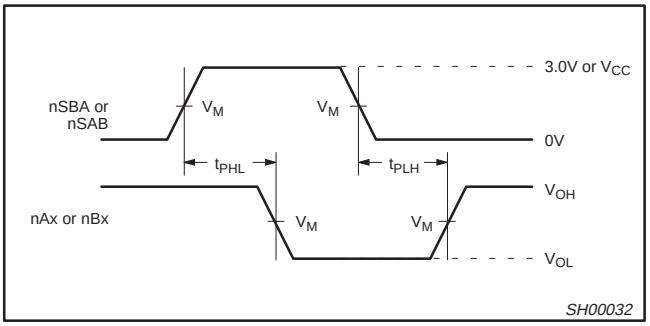

Waveform 3. Propagation Delay, nSBA to nAx or nSAB to nBx

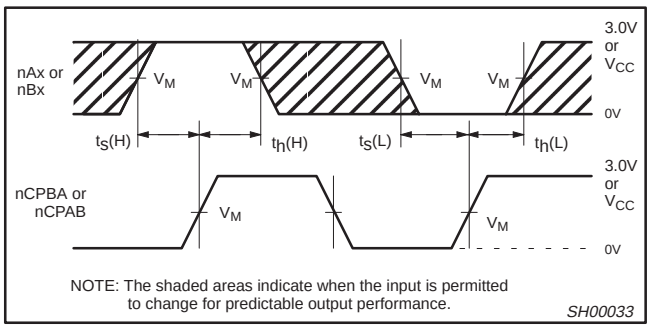

Waveform 4. Data Setup and Hold Times

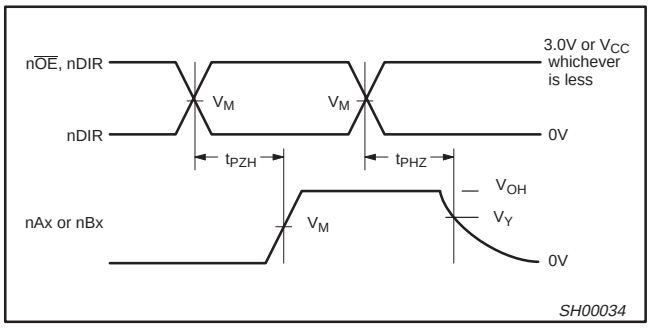

Waveform 5. 3–State Output Enable Time to High Level and Output Disable Time from High Level

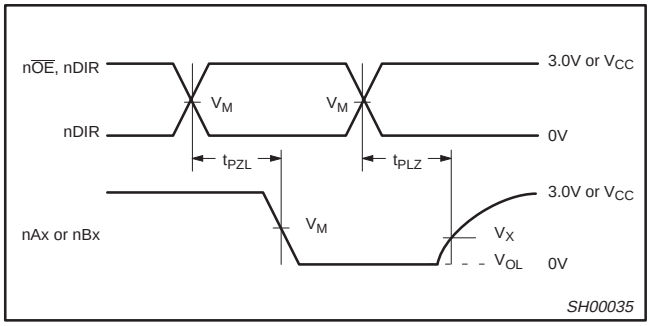

Waveform 6. 3–State Output Enable Time to Low Level and Output Disable Time from Low Level

TEST CIRCUIT

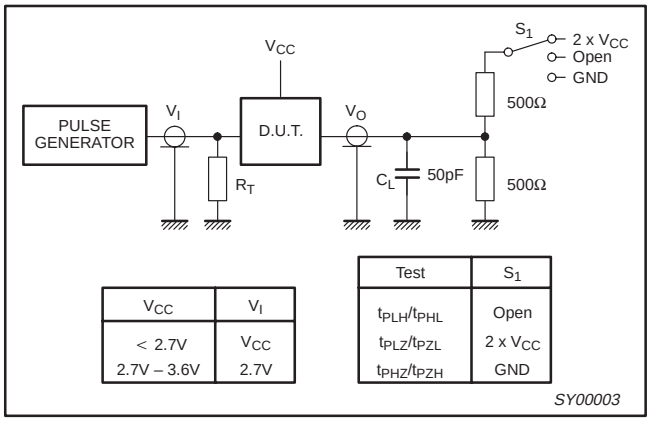

V_{CC}	V_I
< 2.7V	V_{CC}
2.7V – 3.6V	2.7V

Test	S_1
t_{PLH}/t_{PHL}	Open
t_{PLZ}/t_{PZL}	2 x V_{CC}
t_{PHZ}/t_{PZH}	GND

Load circuitry for switching times

APPLICATION INFORMATION

REAL TIME BUS TRANSFER BUS B TO BUS A

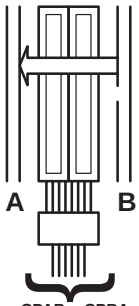

$n\overline{OE}$	nDIR	nCPAB	nCPBA	nSAB	nSBA
L	L	X	X	X	L

REAL TIME BUS TRANSFER BUS A TO BUS B

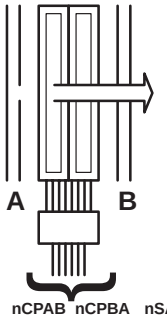

$n\overline{OE}$	nDIR	nCPAB	nCPBA	nSAB	nSBA
L	H	X	X	L	X

STORAGE FROM A, B, OR A AND B

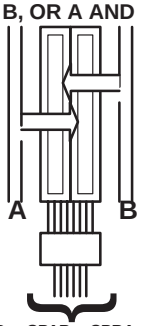

$n\overline{OE}$	nDIR	nCPAB	nCPBA	nSAB	nSBA
L	H	↑	X	X	X
L	L	X	↑	X	X
H	X	↑	↑	X	X

TRANSFER STORED DATA TO A OR B



$n\overline{OE}$	nDIR	nCPAB	nCPBA	nSAB	nSBA
L	L	X	H | L	X	H
L	H	H | L	X	H	X

SH00028

TSSOP56: plastic thin shrink small outline package; 56 leads; body width 6.1mm **SOT364-1**

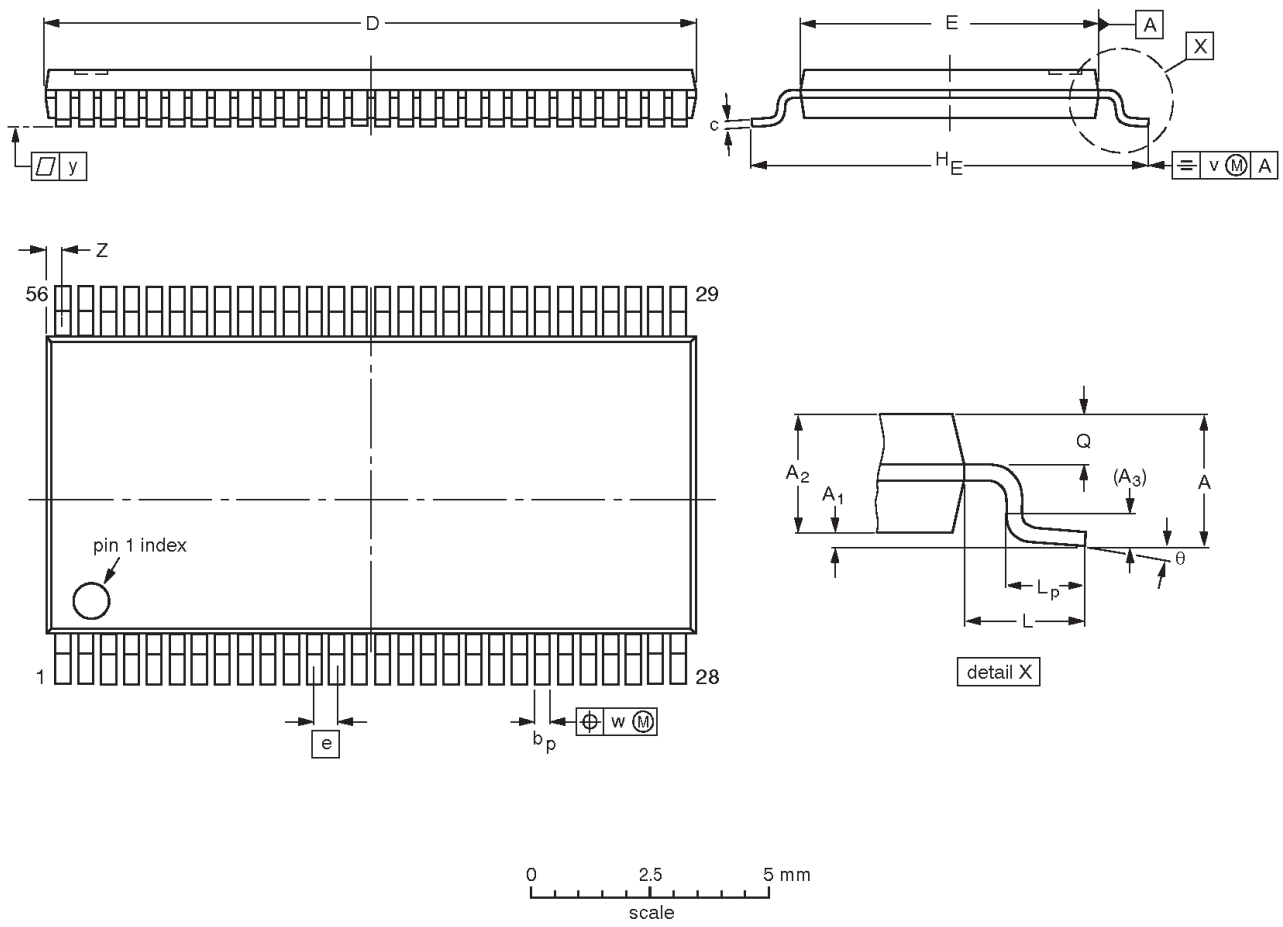

DIMENSIONS (mm are the original dimensions).

UNIT	A max.	A_1	A_2	A_3	b_p	c	$D^{(1)}$	$E^{(2)}$	e	H_E	L	L_p	Q	v	w	y	Z	θ
mm	1.2	0.15 0.05	1.05 0.85	0.25	0.28 0.17	0.2 0.1	14.1 13.9	6.2 6.0	0.5	8.3 7.9	1.0	0.8 0.4	0.50 0.35	0.25	0.08	0.1	0.5 0.1	8° 0°

Notes

1. Plastic or metal protrusions of 0.15 mm maximum per side are not included.
2. Plastic interlead protrusions of 0.25 mm maximum per side are not included.

OUTLINE VERSION	REFERENCES					EUROPEAN PROJECTION	ISSUE DATE
	IEC	JEDEC	EIAJ				
SOT364-1		MO-153EE					~~93-02-03~~ 95-02-10

NOTES

Data sheet status

Data sheet status	Product status	Definition [1]
Objective specification	Development	This data sheet contains the design target or goal specifications for product development. Specification may change in any manner without notice.
Preliminary specification	Qualification	This data sheet contains preliminary data, and supplementary data will be published at a later date. Philips Semiconductors reserves the right to make chages at any time without notice in order to improve design and supply the best possible product.
Product specification	Production	This data sheet contains final specifications. Philips Semiconductors reserves the right to make changes at any time without notice in order to improve design and supply the best possible product.

[1] Please consult the most recently issued datasheet before initiating or completing a design.

Definitions

Short-form specification — The data in a short-form specification is extracted from a full data sheet with the same type number and title. For detailed information see the relevant data sheet or data handbook.

Limiting values definition — Limiting values given are in accordance with the Absolute Maximum Rating System (IEC 134). Stress above one or more of the limiting values may cause permanent damage to the device. These are stress ratings only and operation of the device at these or at any other conditions above those given in the Characteristics sections of the specification is not implied. Exposure to limiting values for extended periods may affect device reliability.

Application information — Applications that are described herein for any of these products are for illustrative purposes only. Philips Semiconductors make no representation or warranty that such applications will be suitable for the specified use without further testing or modification.

Disclaimers

Life support — These products are not designed for use in life support appliances, devices or systems where malfunction of these products can reasonably be expected to result in personal injury. Philips Semiconductors customers using or selling these products for use in such applications do so at their own risk and agree to fully indemnify Philips Semiconductors for any damages resulting from such application.

Right to make changes — Philips Semiconductors reserves the right to make changes, without notice, in the products, including circuits, standard cells, and/or software, described or contained herein in order to improve design and/or performance. Philips Semiconductors assumes no responsibility or liability for the use of any of these products, conveys no license or title under any patent, copyright, or mask work right to these products, and makes no representations or warranties that these products are free from patent, copyright, or mask work right infringement, unless otherwise specified.

Philips Semiconductors
811 East Arques Avenue
P.O. Box 3409
Sunnyvale, California 94088–3409
Telephone 800-234-7381

© Copyright Philips Electronics North America Corporation 1998
All rights reserved. Printed in U.S.A.

print code Date of release: 08-98

Document order number: 9397-750-04688

Let's make things better.

Philips Semiconductors

PHILIPS